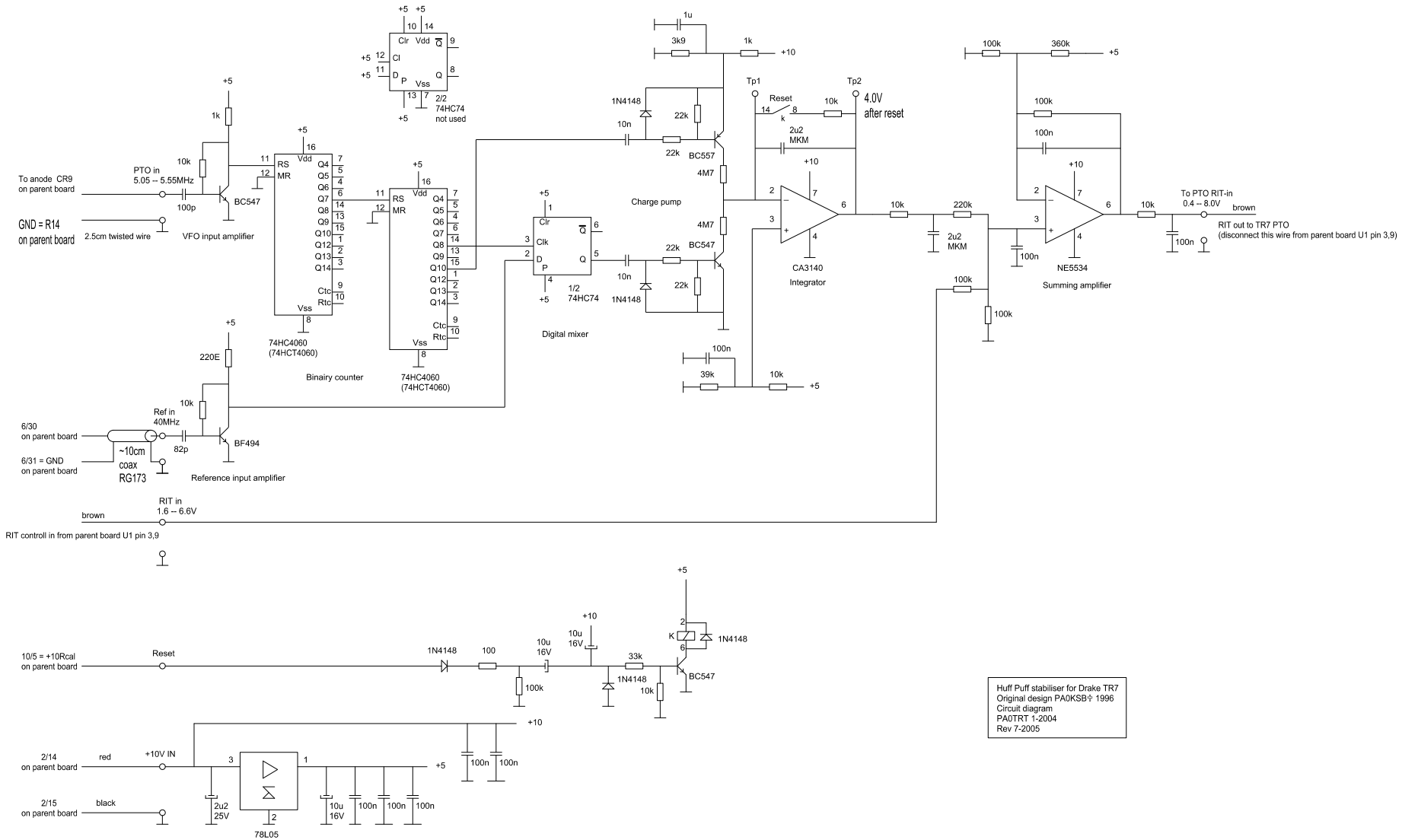

To anode CR9
on parent board
GND = R14
on parent board
2.5cm twisted wire
PTO in
5.05 -- 5.55MHz
100p
10k
1k
BC547
VFO input amplifier
74HC4060
(74HCT4060)
Binairy counter
2/2
74HC74
not used
1/2
74HC74
Digital mixer
Charge pump
1N4148
10n
22k
BC557
4M7
1u
3k9
1k
+10
Tp1
Tp2
Reset
4.0V
after reset
2u2
MKM
CA3140
Integrator
NE5534
Summing amplifier
100k
360k
100n
220k
39k
To PTO RIT-in
0.4 -- 8.0V
brown
RIT out to TR7 PTO
(disconnect this wire from parent board U1 pin 3,9)
220E
Ref in
40MHz
82p
BF494
6/30
on parent board
6/31 = GND
on parent board
~10cm
coax
RG173
Reference input amplifier
RIT in
1.6 -- 6.6V
brown
RIT controll in from parent board U1 pin 3,9
10/5 = +10Rcal
on parent board
Reset
100
10u
16V
33k
BC547
2/14
on parent board
red
+10V IN
2/15
on parent board
black
2u2
25V
78L05
Huff Puff stabiliser for Drake TR7
Original design PA0KSB✝ 1996
Circuit diagram
PA0TRT 1-2004
Rev 7-2005